QUELARC® 100 AMP 600 VAC

3 POLE 3 WIRE
SOLDER CONTACTS
1.000" TO 1.375" CABLE RANGE

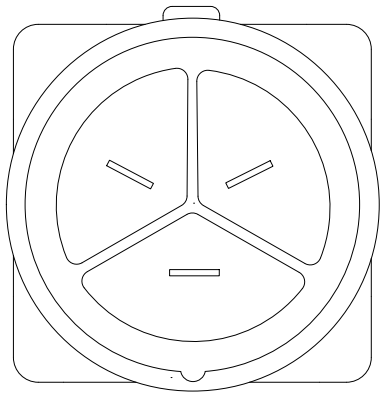

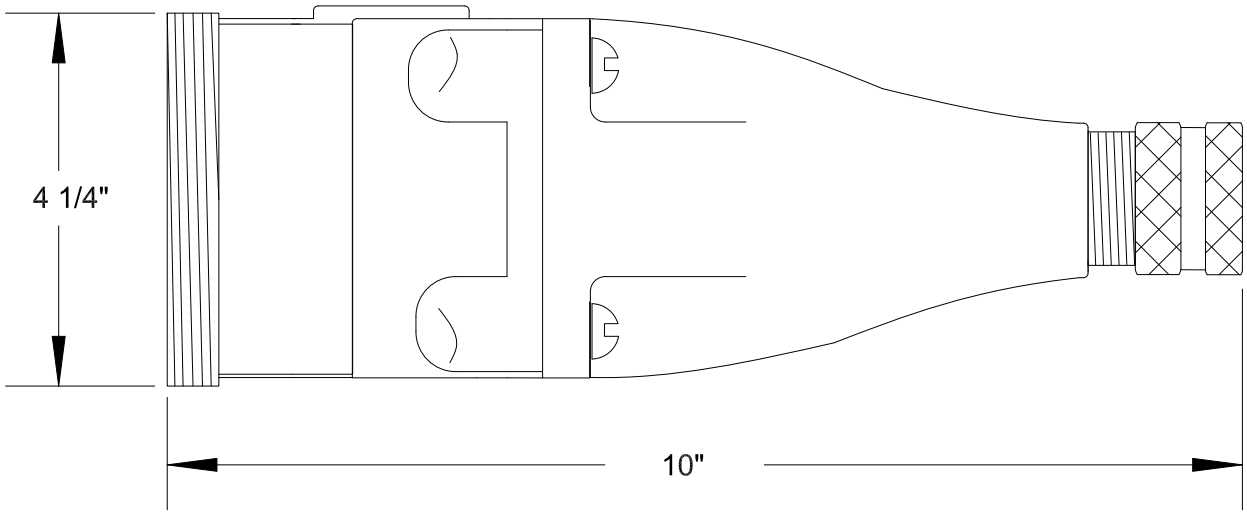

To order contact:
HILLCREST ENTERPRISES, INC.
11092 AIR PARK ROAD
ASHLAND, VA 23005 USA

Phone: 804-798-8390
Fax: 804-752-7830

http://www.pylenational.co
http://www.plugs.cc

DRAWING NOT TO SCALE

DRAWN BY NVS	HILLCREST ENTERPRISES		
APPROVED 3/15	KWPLD-1110036		
ISSUED			
RECORD OF ISSUE	SCALE	DRG No.	SHEET 1 OF 1